Lesson 8 Test the water pump

Table

1. Instruction of DSB413-B water pump 2

2. What do you need to prepare 2

3. Wiring Circle 5

4. Open the test code 7

5. Upload the code and test 9

6. Code 10

7. Any questions and suggestions are welcome 11

1. Instruction of DSB413-B water pump

This course uses a miniature water pump model DSB413-B.

This water pump is mainly composed of a motor, impeller, pump body, and sealing components. The working principle of a water pump is that the motor drives the impeller to rotate. When the impeller rotates, the liquid is sucked into the pump body and pushed to the outlet.

DSB413-B water pump parameters

Rated voltage(DC)	DC6.0V	DC8.0V	DC9.0V	DC12.0V
Rated current	<800mA	<600mA	<550mA	<450mA
Rate of flow	Pump 0.4-1.3L/Min，inhale 1.0-1.5LPM			
Can use fluids	Water,air			
Temperature range for use	5° C~95° C			
Net weight	60g			
Overview	Mainly used for products such as water dispensers, water cluster equipment, plant watering equipment, etc			

2. What do you need to prepare

Components	Quantity	Picture	Remark
A to B USB cable	1		
Arduino UNO R3	1	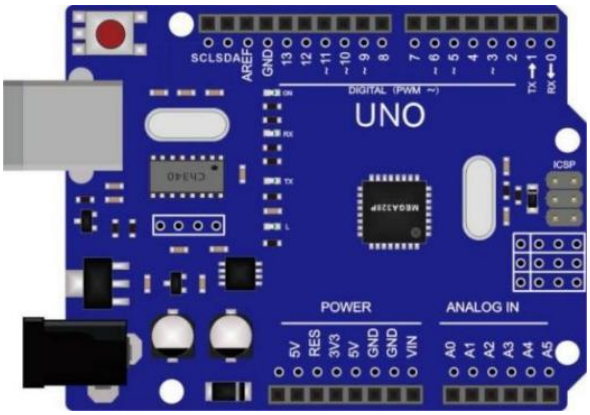	

Expansion board for Arduino UNO	1	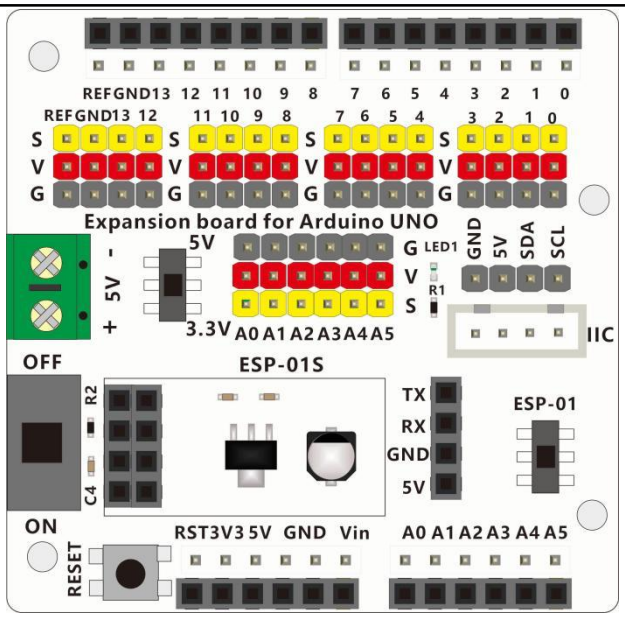	
Relay Module	1	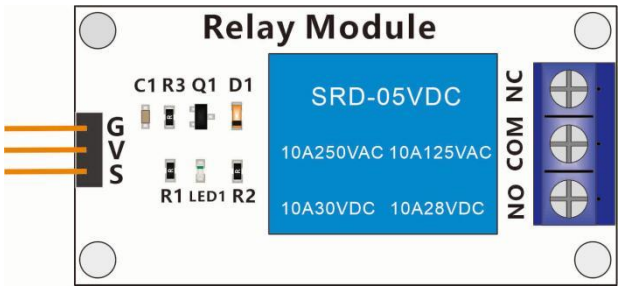	
Water pumb	1	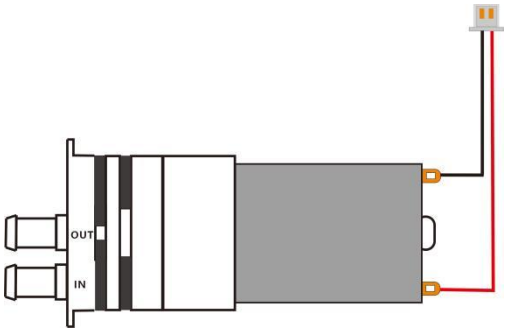	
Power adapter board	1	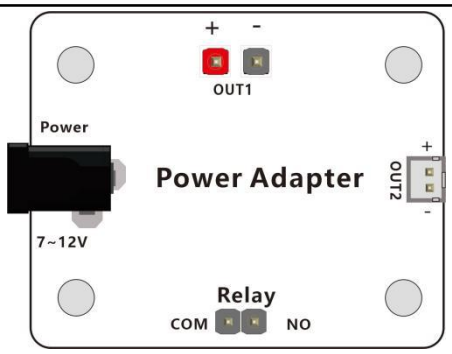	

The power adapter	1		
3Pin Female to female dupont wire(Black, red, yellow)	1		Length 150mm
1Pin Female to male dupont wire(black)	1		Length 100mm
1Pin Female to male dupont wire(red)	1		Length 100mm
1Pin Female to male dupont wire(yellow)	1		Length 150mm
1Pin Female to male dupont wire(green)	1		Length 150mm
4/7 black soft rubber hose(1m)	2		Need to cut it yourself,you can cut the required length according to your actual situation

Bucket (or other container)	2	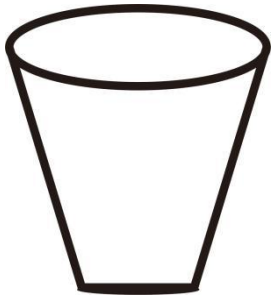	Need to prepare by oneself, not included in the kit

3. Wiring Circle

Insert the Arduino UNO expansion board onto the Arduino UNO R3 board, paying attention to the assembly direction.As shown in the following figure:

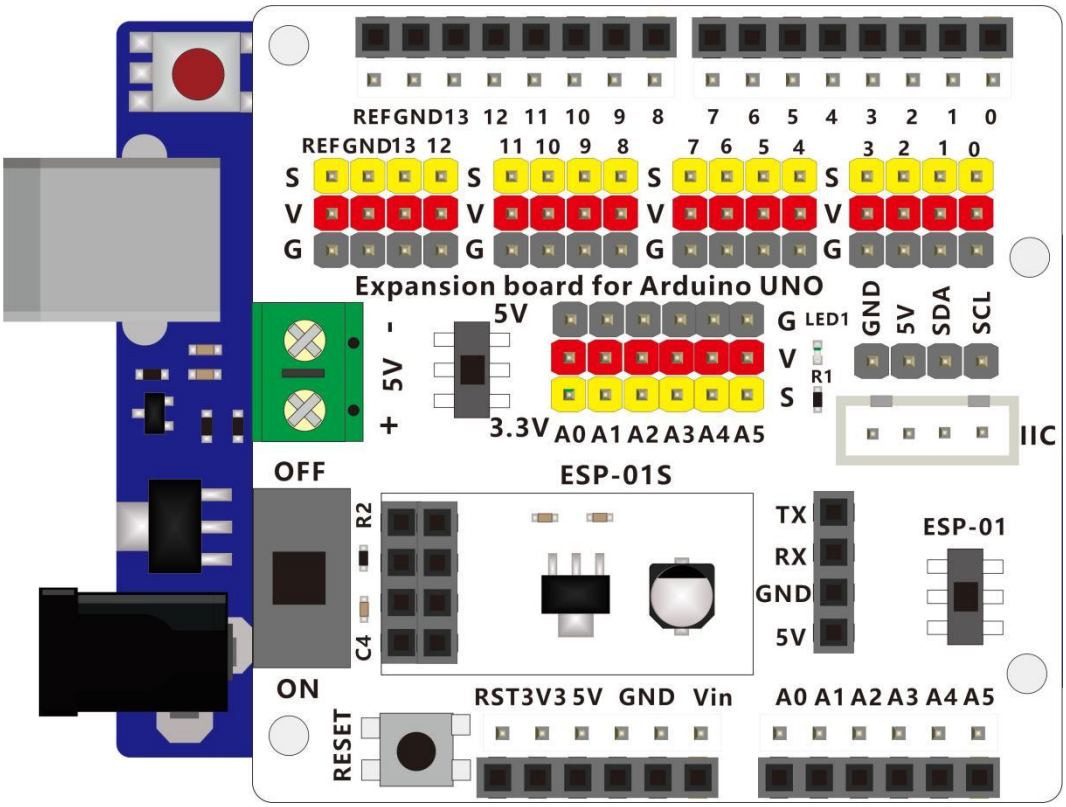

Turn the power switch on the expansion board to ON side and the 5V/3.3V switch to 5V side. Connect the relay module to the Arduino UNO Expansion board using the3Pin Female to female dupont wire(Black, red, yellow).

Wiring between the relay module and the Arduino UNO expansion board		
pins of relay module	pins of the expansion board	Connection wire
G	G	3Pin Female to female dupont wire(Black, red, yellow),Length 150mm
V	V	
S	9	

Connect the relay module COM pin to COM pin of the Power Adapter board.
Connect the relay module ON pin to ON pin of the Power Adapter board.

Wiring between the relay module and Power Adapter board		
pins of relay module	pins of Power Adapter board	Connection wire
COM	COM	1Pin Female to male dupont wire(green),Length 150mm
NO	NO	1Pin Female to male dupont wire(yellow),Length 150mm

Connect the power adapter board OUT1+ pin to Vin pin of the UNO expansion board.
Connect the power adapter board OUT1- pin to GND pin of the UNO expansion board.

Wiring between the Power Adapter board and the Arduino UNO expansion board		
pins of Power Adapter	pins of the expansion board	Connection wire
OUT1+	Vin	1Pin Female to male dupont wire(red),Length 100mm
OUT1-	GND	1Pin Female to male dupont wire(black),Length 100mm

Insert the power terminal of DSB413-B water pump into the OUT2 interface of the power adapter board.
Cut two 1m long 4/7 black soft rubber hoses (you can cut the required length according to your actual situation) and install them at the IN and OUT interfaces of the water pump.
Insert the power connector of OUT1 on the power adapter board into the power port of the Arduino UNO board.
Cut two 1m long 4/7 black soft rubber hoses (you can cut the required length according to your actual situation) and install them at the IN and OUT interfaces of the water pump.
Insert the water pipe connected to the IN interface of the water pump into the water bucket filled with water, for the water pump to absorb water; Insert the water pipe connected to the OUT interface of the water pump into an empty bucket for water pump drainage.
Connect the Arduino UNO to the computer via a A to B USB cable.
The hardware connection diagram is as follows:

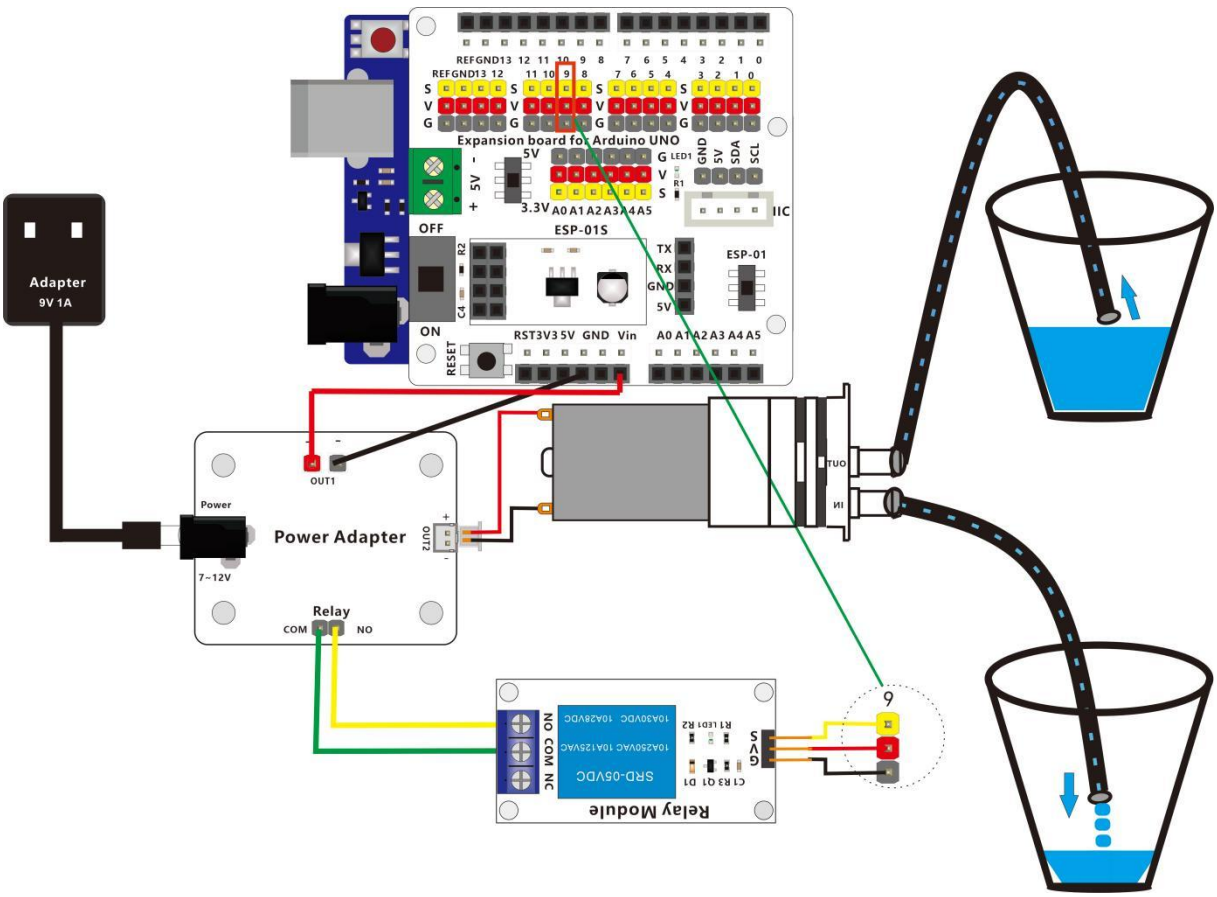

After connecting all hardware modules according to the instructions and diagram, check again to ensure there are no misconnections, especially to ensure that VCC and GND are not short circuited. Finally,Insert the male end of the power adapter into the female port of the power adapter board.

4. Open the test code

The code used in this lesson is placed in this folder：“ E:\CKK0021-main\Tutorial\sketches”

6_1_water_pump_test

Double-click the Arduino IDE shortcut on the desktop to open it

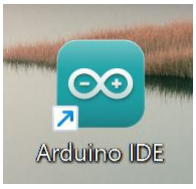

Click "File" --- "open"

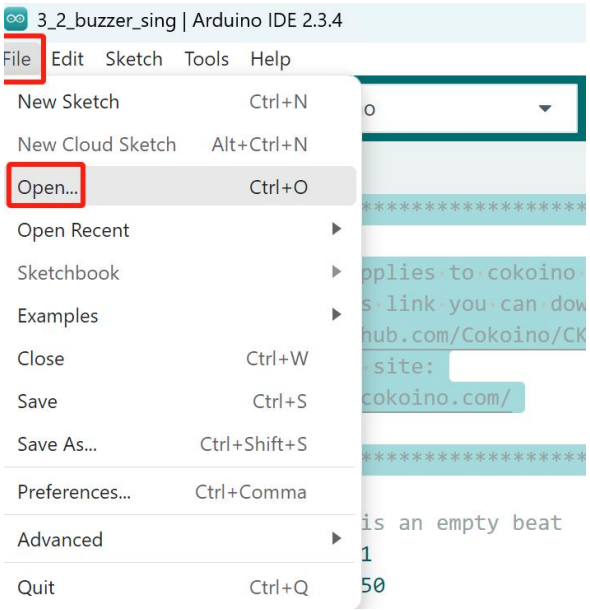

Select the code in the folder named 6_1_water_pump_test:
E:\CKK0021-main\Tutorial\sketches\6_1_water_pump_test,Then click "open".
The code interface after opening is as follows

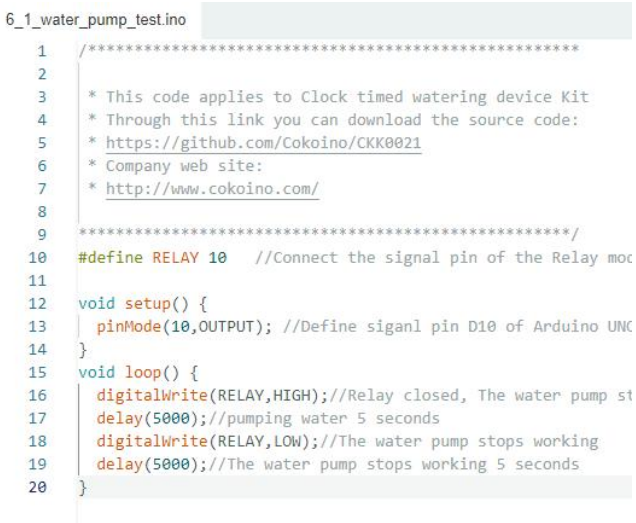

Select the board "Arduino UNO"and Port "COM10" (COM port is commonly known as an input output port for a device normally PC which enables communication between Arduino and PC. You can check your arduino com number in device manager, the com port of our arduino board is recognized as COM10 in this tutorial)

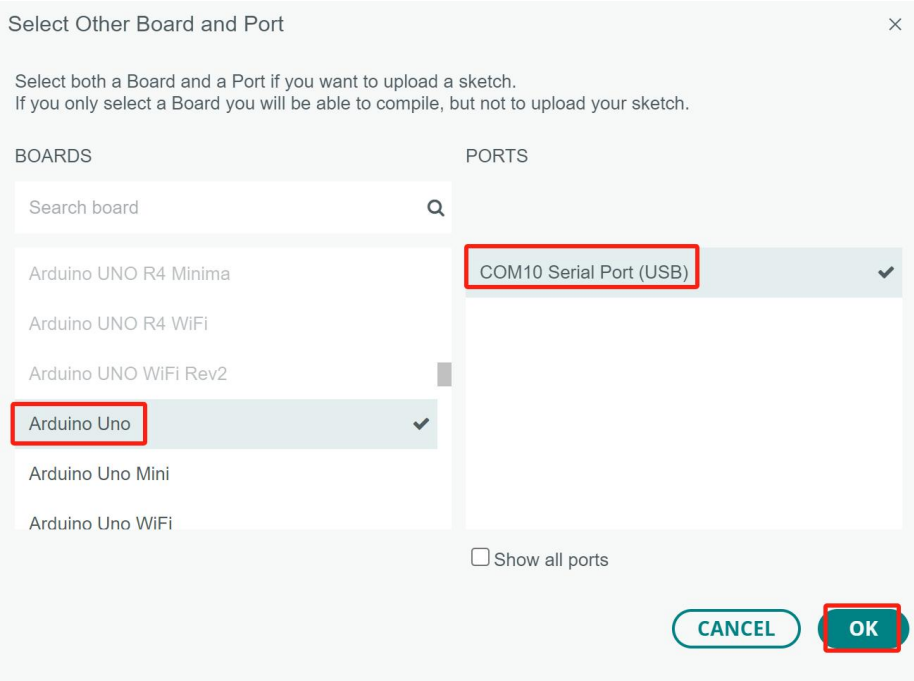

5. Upload the code and test

Click compile button, successfully compiled the code will display "Done compiling"

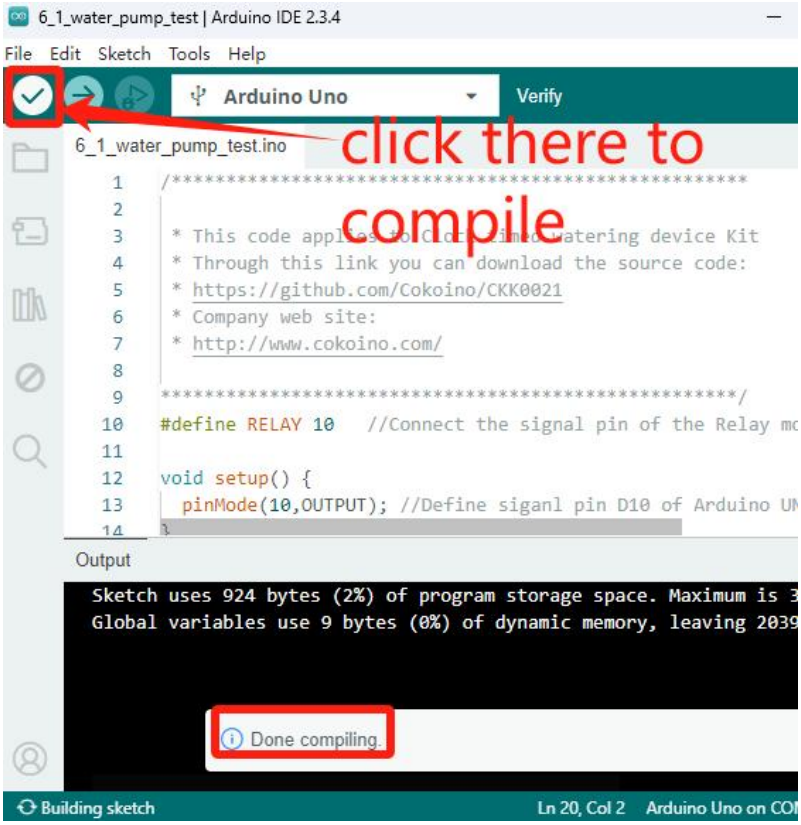

Click upload button, successfully uploading the code will display "Done uploading". When code is uploaded successfully, the program starts to run.

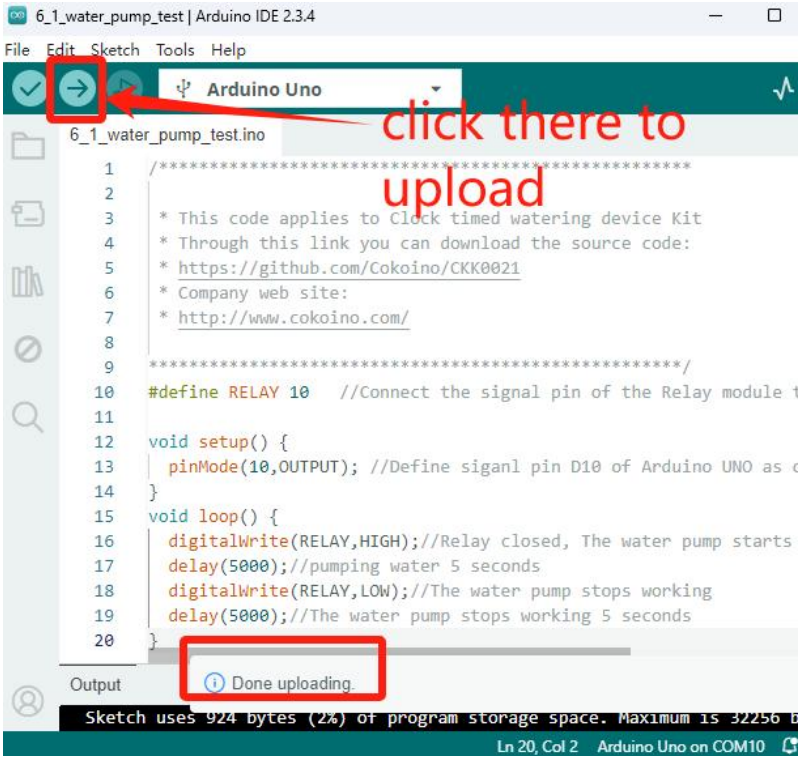

You can hear the relay beep, and then the water pump starts pumping water. After pumping for 5 seconds, the relay beeps and the water pump stops pumping for 5 seconds. Continue the next cycle until the power adapter board is disconnected.

6. Code

6_1_water_pump_test.ino

```
#define RELAY 10    //Connect the signal pin of the Relay module to the D10 pin of the Arduino UNO

void setup() {
  pinMode(10,OUTPUT); //Define siganl pin D10 of Arduino UNO as output mode
}
void loop() {
  digitalWrite(RELAY,HIGH);//Relay closed, The water pump starts working, start pumping water
  delay(5000);//pumping water 5 seconds
  digitalWrite(RELAY,LOW);//The water pump stops working
  delay(5000);//The water pump stops working 5 seconds
}
```

7. Any questions and suggestions are welcome

THANK YOU for participating in this Lesson 8 experience!

If you find any errors, omissions or you have suggestions and/or questions about this lesson, please feel free to contact us:

cokoino@outlook.com

We will make every effort to make changes and correct errors as soon as feasibly possible and publish a revised version.

If you want to learn more about Arduino, Raspberry Pi, Smart Cars, Robotics and other interesting products in science and technology, please continue to visit our Amazon Store by search for "**LK COKOINO**" on Amazon. Or visit our official website: **www.cokoino.com**
We will continue to launch fun, cost-effective, innovative and exciting products.

Thank you again for choosing Cokoino products.

LK COKOINO